DATA LINES

Component Index

Audio Amplifier
Body Control Module (BCM)
Data Link Connector (DLC)
Driver Door Module (DDM)
Electronic Brake Control Module (EBCM)
Front Passenger Door Module (FPDM)
Fuse Block-Underhood
HVAC Control Module
HVAC Control Module-Auxiliary
Inflatable Restraint Sensing and Diagnostic Module (SDM)
Instrument Panel Cluster (IPC)
Liftgate Module (LGM)
Memory Seat Module-Driver
Memory Seat Module-Passenger
Powertrain Control Module (PCM) (4.2L)
Powertrain Control Module (PCM) (5.3L)
Radio
SP205
Transfer Case Shift Control Module (4WD)
Vehicle Communication Interface Module (VCIM)

DATA LINES

Circuit Schematic

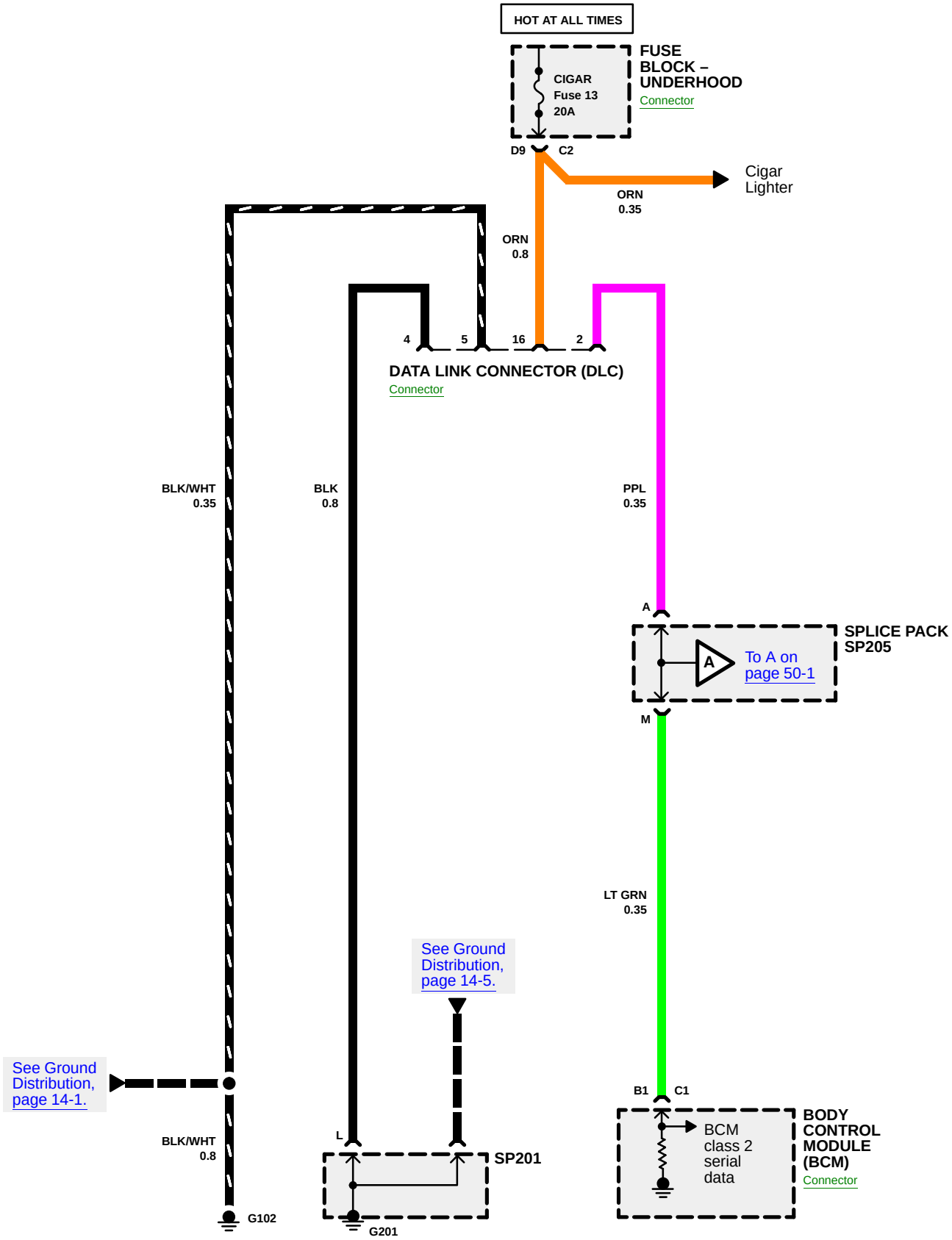

DATA LINES

Circuit Schematic

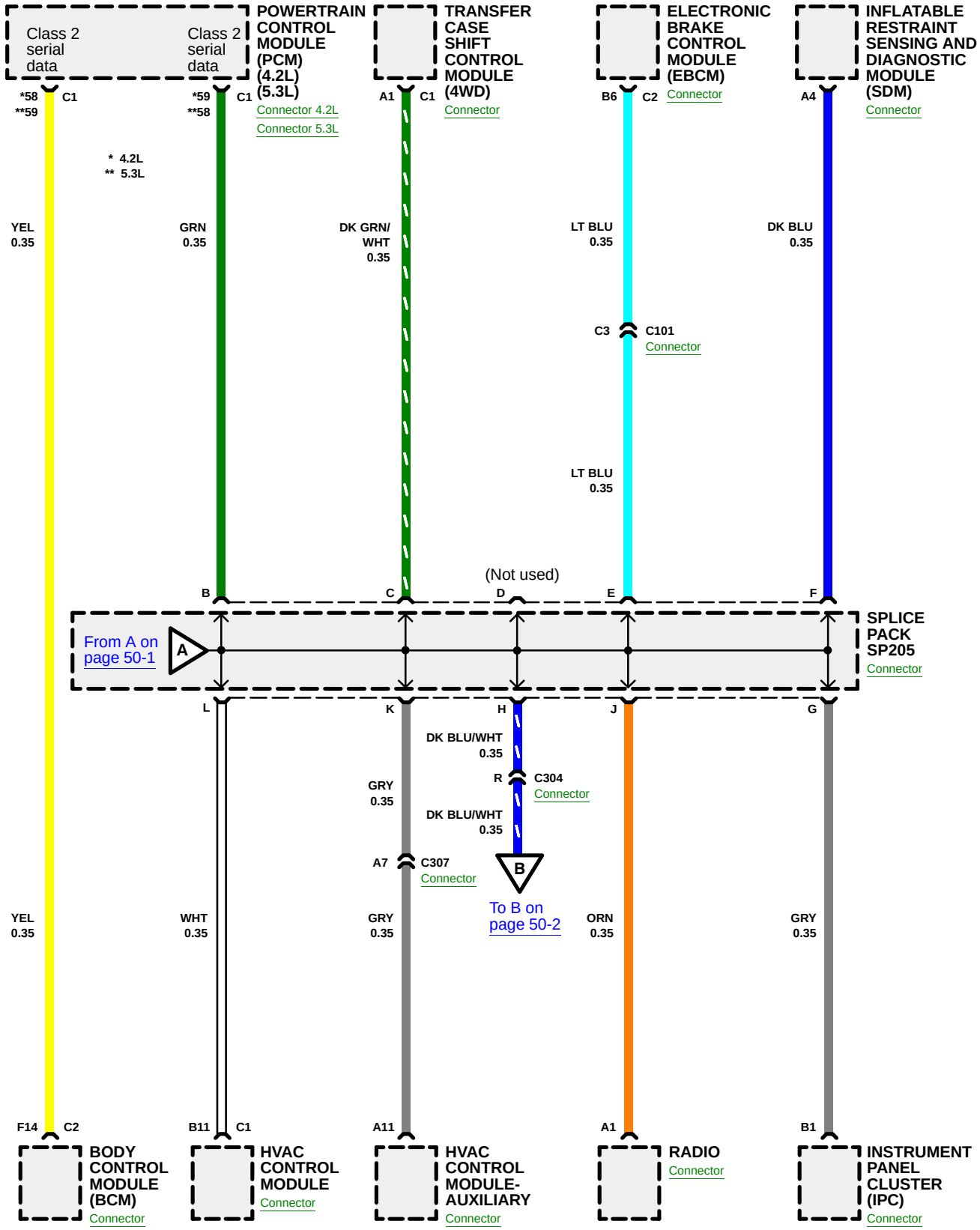

DATA LINES

Circuit Schematic

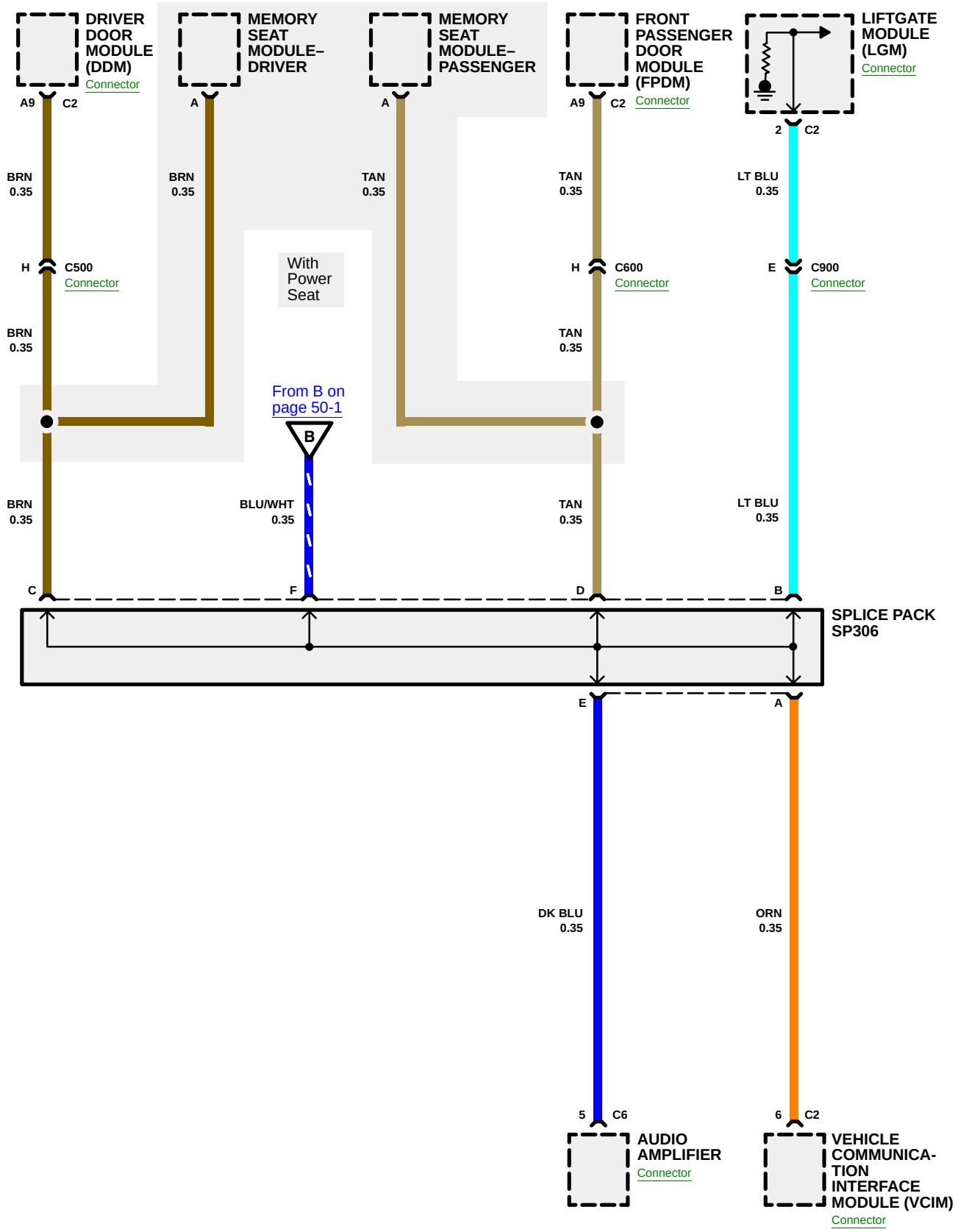

DATA LINES

Component Location Index

(Refer to Section 201 for photographs.)

Component		Photo No.
Audio Amplifier	Behind the left side panel of the rear compartment	108
Body Control Module (BCM)	On Rear Fuse Block, under left rear seat	53
Data Link Connector (DLC)	Below I/P, above the accelerator pedal	60
Driver Door Module (DDM)	On lower part of the driver door switch panel	95
Electronic Brake Control Module (EBCM)	Inner left side frame rail (near transmission)	41
Front Passenger Door Module (FPDM)	On lower part of passenger door switch panel	96
Fuse Block-Underhood	Left side of engine compartment	3
HVAC Control Module	In the IP center trim panel, beneath the radio	75
HVAC Control Module-Auxiliary	At rear of lower console	85
Inflatable Restraint Sensing and Diagnostic Module (SDM)	Beneath the lower console	87
Instrument Panel Cluster (IPC)	On the left side of the IP, above the steering column	59
Liftgate Module (LGM)	Inside the liftgate	113
Memory Seat Module-Driver	Mounted on underside of seat	121
Memory Seat Module-Passenger	Mounted on underside of seat	121
Powertrain Control Module (PCM) (4.2L)	Left front of engine	5
Powertrain Control Module (PCM) (5.3L)	Left front of engine compartment	25
Radio	Center of I/P	74
SP205	Below left side of I/P	57
Transfer Case Shift Control Module (4WD)	Behind the left lower I/P	58
Vehicle Communication Interface Module (VCIM)	Under right rear seat	65
Connector		
C101 (38-BLK)	Left side of engine compartment	3
C304 (16-BLK)	Under carpet, rear floor area	103
C307 (18-MD GRY)	Beneath rear of lower console	86
C500 (12-BLK)	Midpoint of leading edge of left front door	93
C600 (12-BLK)	Midpoint of leading edge of right front door	93
C900 (6-BLK)	Top of the liftgate	107
Ground		
G102	Left side of engine compartment	4